Best Made Products Inc.

info@BMP-Inc.com www.BMP-Inc.com

Floating Lake Truss Dock Instructions

Table of Contents

1. Dock Assembly and Set-Up

The following tools will be needed for dock installation…

- Combination wrench - 3/4”
- Combination wrench - 9/16”
- (2) Combination wrench - 1/2"
- Large Screw Driver or Metal Rod
- Utility gloves
- Grease or fastener lube (recommended for use on all fasteners)

1.1 Installing Dock Floats

Floats connect to the dock frames via the track system on the bottom of the dock frame and the supplied Float Support Members. For 4x8 dock frames, (2) 4ft x 3ft dock floats are used while for 6x8 dock frames, (2) 6ft x 3ft dock floats are used.

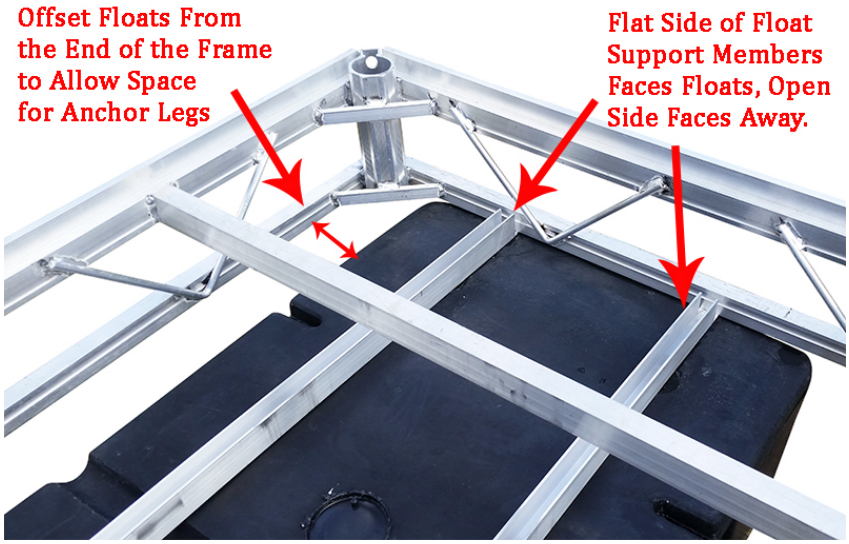

Image 1

When positioning the floats on the dock frame, it is important to offset the floats approximately 6” from the end of each side of the dock frame to allow room for the Anchor Posts as shown in Image 1.

Each float will use either 2 or 3 Float Support Members depending on the number of float mounting grooves supplied on the float being used (Image 1). Each Float Support Member has 2 holes drilled on each end. The outer most holes are used to connect the Float Support Members to the track system on the bottom of the frame using the supplied 5/16” carriage bolts and associated hardware, with the head of the carriage bolt sliding in the track. The inner 2 holes are used to connect the Float Support

Members to the dock floats using the supplied 5/16” hex bolts and associated hardware as shown in Image 2.

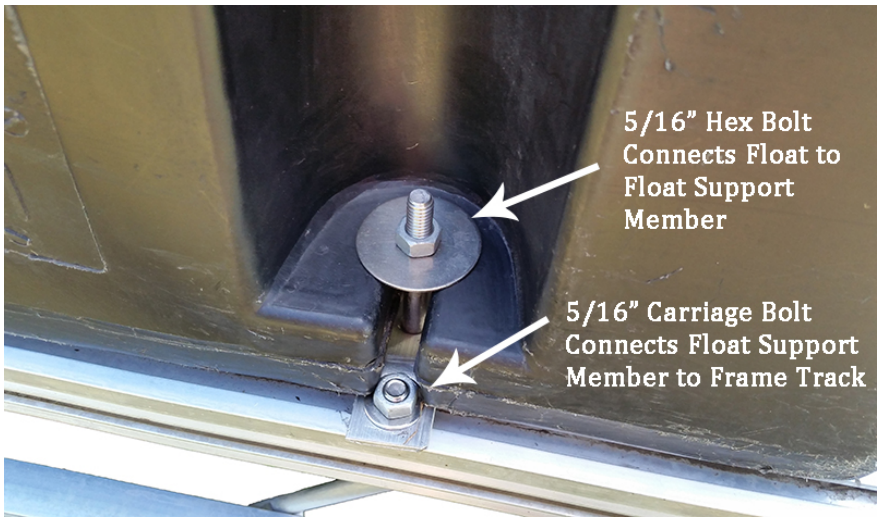

Image 2

It’s best to first mount the Float Support Member to the dock frames prior to mounting the floats as access to the bottom track system is limited with the floats in place.

1.2 Positioning Quick Clips and Hinge Bars

To connect one dock section to another we will either use a pair of our Quick Clip dock connectors or a Bar and Pin hinge system. When possible, the Quick Clip dock connectors are used exclusively. For longer systems Bar and Pin hinges will be used to provide a stress break at various locations throughout the system. Because every layout and application is unique, you should check your invoice or packing slip to see if and where the Bar and Pin hinges are to be used. The connection locations will be specified on the line item that lists the Bar and Pin hinge parts and quantity.

When installing a dock system in the water, one will typically start at the shore and work their way out into the water. Therefore, let's designate the end of a dock section closest to shore as the "Shore End" and the end of a dock farthest from shore as the "Water End". Because we're starting at shore, only the "Water End" of the first section gets Quick Clips. At the end of a dock system (farthest from shore) there will be no Quick Clips as there are no subsequent dock sections to be joined.

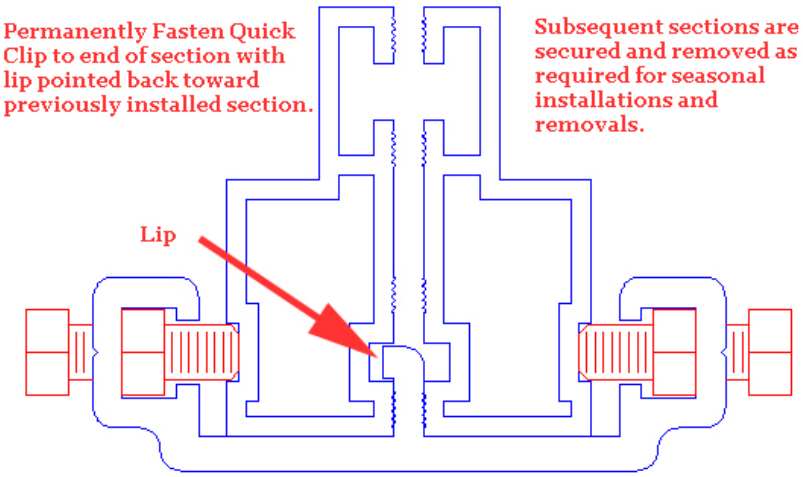

Image 3

Image 3 shows how the Quick Clips secure sections together via the 5/16" x 1" long hex bolts and hex nuts. The Quick Clips can be mounted on both the ends and the sides depending on the dock system layout. The Quick Clip will be permanently installed to the frame in which it has the lip pointing into the frame track. The side of the Quick Clip that does not have the lip is the side that will be disconnected during seasonal installations and removals (if required such as in northern climates).

To ensure a strong connection, 4 Quick Clips are used per dock connection with 2 mounting upside down to the bottom track and 2 mounting right side up to the upper track as shown in Image 4. It is best to install the 2 Quick Clips mounted to the upper track on the shore side of a dock connection, or the previously installed section. The 2 Quick Clips that are mounted upside down and on the bottom track should be installed on the water side of a dock connection, or the next section to be installed. This order will make connecting sections as easy as possible.

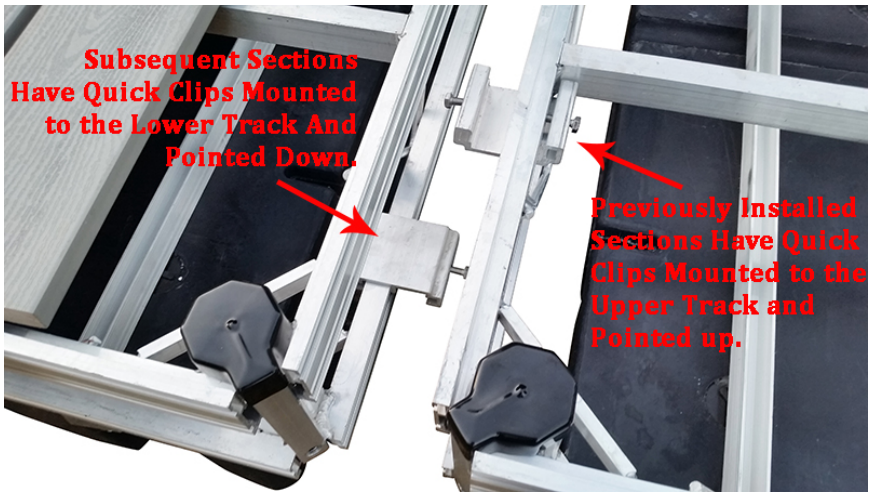

Image 4

As seen in Image 5, Quick Clips should be positioned just inside and just outside of the outermost “V” rods on the truss frame. This rule also holds true when connecting the 8ft sides of a dock frame as opposed to the 4ft sides as shown. For example, when the 8ft side of a frame has (5) of the “V” rods, the connectors 1 and 3 would go top and bottom of the outside of “V” rod number 1 while connectors 2 and 4 would to top and bottom of the outside of “V” rod number 5.

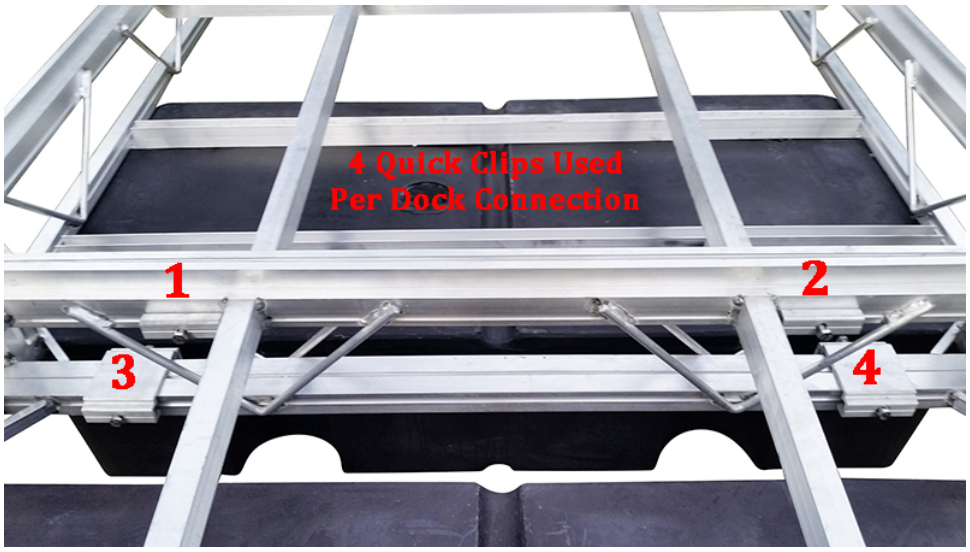

Image 5

Once the Quick Clips are engaged and the frames properly aligned, the 5/16” hex bolts can be tightened to draw the frames together and tight.

For dock systems where a hinged connection is needed, a Bar and Hinge Pin system will be supplied. These are supplied on an as needed basis with the Quick Clips being the preferred method of attachment. Again, consult your sale invoice or packing slip and look for the Bar and Hinge Pin line item to see the location they are to be used.

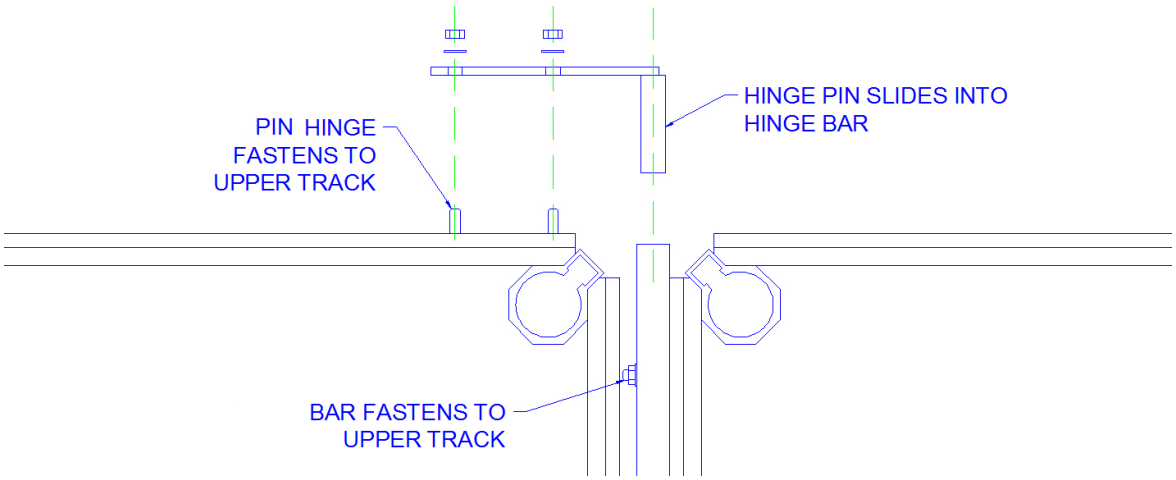

Image 6

A Bar and Pin Hinge system consists of (1) square galvanized steel tube which is approximately the width of the dock connection which it's joining to, and (2) Pin Hinges which are used as a pivot point, with (1) Pin Hinge mounting to each side of the Bar. The Bar is fastened to one side of the connection by sliding carriage bolts into the upper track and fastening with the supplied hardware. Take care to make sure the Bar is centered on the frame in which it is connecting to. A Pin Hinge is mounted to each side of the mating dock frame by likewise sliding carriage bolts in the upper track and fastening the Pin Hinges to the frame, with the pin sliding into the Bar as shown in Image 6.

1.3 Installing Anchor Posts

After installing the Quick Clips, the next step is to install the Anchor Posts. The Anchor Posts are used to maintain the position of a floating dock system while in use, but allow the dock to move up and down with changing water levels. To limit the risk of Anchor Posts binding in the post holders during fluctuating water levels, only the minimum amount of Anchor Posts required to safely secure a system are used. Because the quantity of Anchor Posts is specific to a given system and application, you should consult your purchase invoice or packing slip and look at the Anchor Post line item to see the locations where these are to be used.

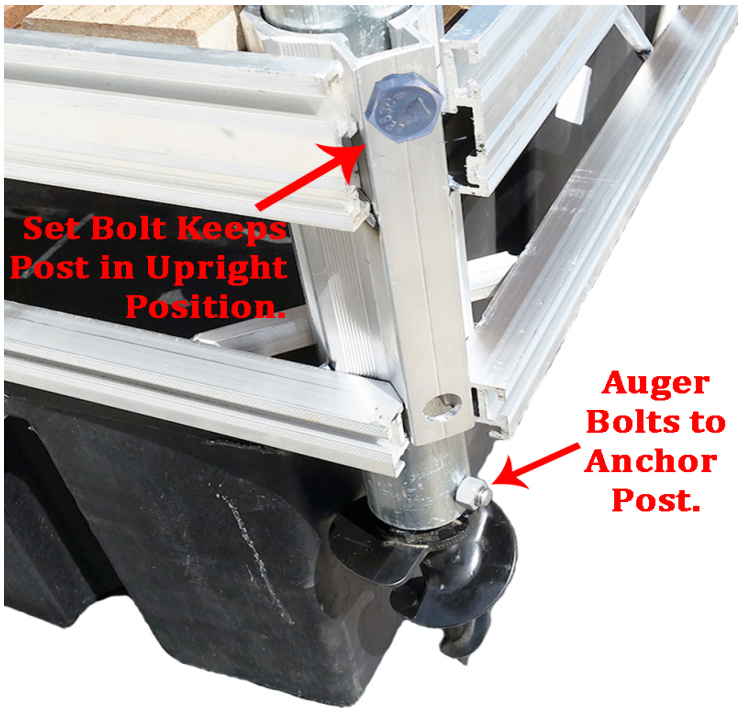

Image 7

As we can see in Image 7, the Anchor Post pipe slides through the post holder and a single 1/2" set bolt and nut is used to keep the post in the upright position prior to it

being positioned in the water. Once the Anchor Post has been installed in the upright position, the auger can be fastened to the bottom of the post through the pre-drilled hole using a 3/8” hex bolt and nut.

1.4 Installing Docks into the Water

Before installing your Bestmade docks, the annual inspection procedure should be followed per section 3.2 of this text. This includes checking for rotted, cracked, split, or broken members, along with a thorough inspection of all fasteners to check for excessive corrosion or stripped or jammed threads. The deck panels should also be inspected for defects of any kind, including broken, split, or unsecured boards, and fasteners should be checked for proper and sufficient lubrication.

1. Once sections 1.1 through 1.3 have been completed, dock sections may be installed into the water. For first time installation, the Anchor Posts of each dock section should be pre-positioned and locked in the upright position as specified in section 1.3, along with the Quick Clips being fastened to their appropriate frame as specified in section 1.2. This can be done on shore.

3. Float a dock frame into place and then place the deck panels. Standard dock sizes have (2) deck panels per section of dock. Deck panels can be made out of cedar, poly panels (Surestep), or PVC. Each deck panel is secured to the frame via a pair of deck clips which slide into the frame track. Deck clips should be used on the center of the 2nd boards on opposite corners for cedar and PVC panels (Image 8). For poly panels, deck clips should be placed roughly 10" from the panel ends on opposite corners.

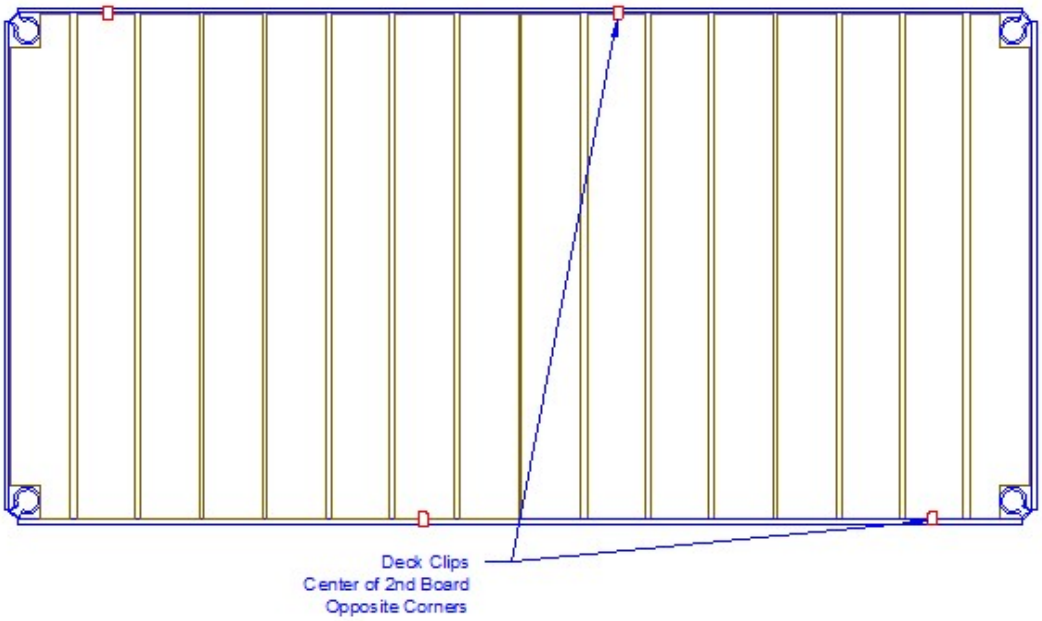

Image 8

Image 9

For dock sections that use an Anchor Post in each corner, or where an 8ft side of a dock section has (2) Anchor posts, the decking clips must be staged within the track prior to assembling the Anchor Posts and set bolts used to keep the dock in the upright position (Image 10). If the Anchor Posts and set bolts were assembled first, the decking clips would not have room to enter the track. Once staged, the decking clips can be moved out of the way to place a panel, then slid over the panel into position.

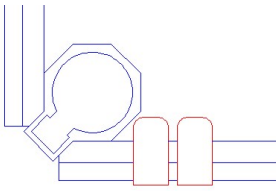

Image 10

For 6ft wide dock sections using the Surestep deck panels, there are (4) panels used of 3ft wide each as opposed to the typical (2) at 6ft wide each for docks decked with cedar. Therefore, there is a need to also secure the deck panels in the center of the frame.

As seen in Image 11, the Surestep deck panels are also to be secured at 2 locations in the center of the dock as shown via the center rail decking clip assemblies. These assemblies will be used between the panels and through the pre-drilled holes on the center rail of the dock frame. A larger washer will be used on the top side of the assembly with a large washer and wing nut used to secure under the dock frame center rail. Sequence becomes important on these panels in order to be able to access the center rail decking clip assemblies. For installation, panels 1 and 2 should be installed, then the first assembly, then panels 3 and 4, then the second assembly. Reverse order during removal.

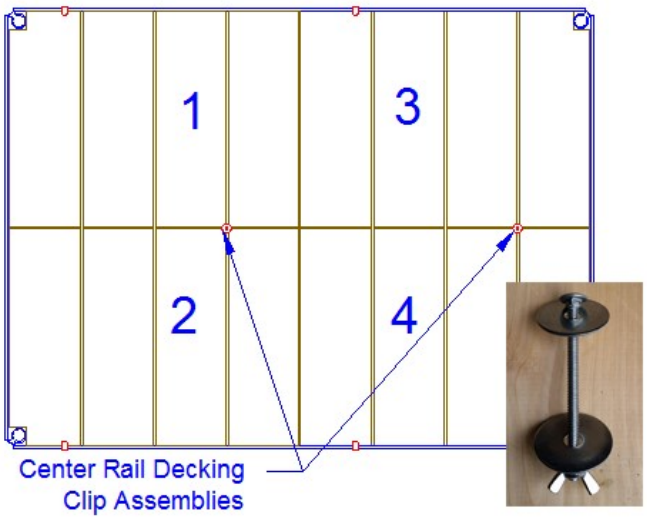

Image 11

** Decking clips will not be able to enter the track at a location that has the upper set bolt installed in the leg holder. Hence, for a 4 leg section the upper set bolt will have to be loosened or completely removed to allow the decking clip to enter the track. **

2. With the deck panels in place and the dock at its desired location, release its associated Anchor Posts (if it has them) from the upright position down into the water by completely removing the Anchor Post set bolt and nut as seen in Image 12.

Image 12

With the Anchor Posts dropped to the bottom, they can now be cranked down into the lake/river/sea bottom. To turn them down into the bottom either a large, strong screwdriver or any rigid metal rod can be used as a mechanism to turn the posts. The

Anchor Posts are supplied with a large hole on the end opposite the augers. Stick the rod through the hole and turn the post until it is sufficiently submerged. How deep the augers need to go varies based on the material they're screwing into as well as the application. It is good to target 1ft depth of auger submergence as the minimum, but for softer bottoms or rougher water it may need to be much more.

Image 13

Care should be taken to ensure that the Anchor Post is completely vertical when being screwed into the bottom. It's best to get your weight as centered on the dock as possible and screw as vertical as possible as seen in Image 13. This will prevent binding during water fluctuations from a crooked Anchor Post.

3. To connect sections together, the Quick Clips should be engaged and tightened as shown in Image 5 of section 1.2.

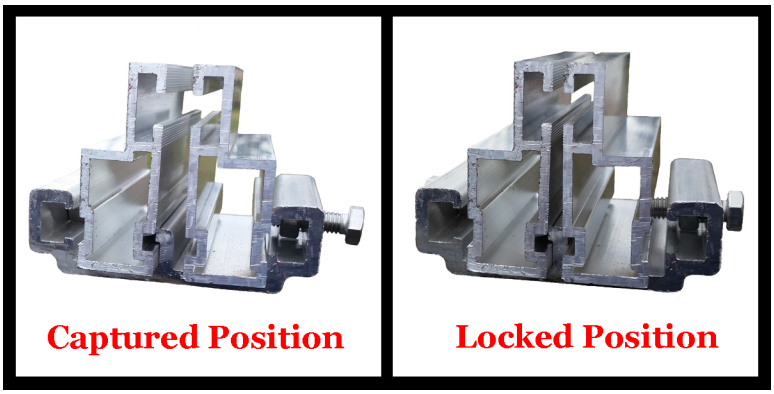

Image 14

In Image 14, we can see that the Quick Clips have a "Captured" and "Locked" position. When adding dock sections to a system, a subsequent dock section will be interfaced to the previous section's Quick Clip. This is the "Captured" position. To secure the dock sections together we use a set bolt and nut. The 5/16" nut slides into the channel in the Quick Clip and uses the 5/16" x 1" long hex bolt to pinch the sections together. Once the set bolt is hand tight, an additional turn will secure the sections together.

It may be necessary to slide a decking panel back to gain access to the connection area as shown in Image 15.

Image 15

Image 16

4. Once the deck panels are installed, any unused leg holders can be covered with a black vinyl cap as seen in Image 16. Round vinyl caps can also be installed on the top of all Anchor Posts. For applications with large water fluctuations, it may be necessary to drill a hole in the top of the round vinyl caps to allow for venting the pressure inside the Anchor Post as they fill with water.

Repeat steps 3 and 4 with subsequent sections until the dock is complete.

7. For removal, reverse steps 4 through 2. It is best to store decking in a dry area out of the weather. Floats and Anchor Posts don't need to be removed from the frame each year. Anchor Posts can simply be locked in the upright position. Sections can be placed on shore as individual units without decking.

2. Safety

2.1 Safety Introduction

Your Bestmade Docks were designed to provide a lifetime of safe and enjoyable use. However, even the most carefully developed products are not without their limitations. As such, this safety section has been introduced to not only educate the owner about the proper use of their product, but also to introduce warning signs of a potential dock malfunction. This entire document should be read thoroughly and any questions or concerns about the safe use of your docks should be addressed to Bestmade Docks directly.

2.2 Safety Definitions

The safety messages outlined in this document are in place to alert dock owners and users of potentially dangerous situations. If a situation or item is addressed in this text in regards to a safety concern, it is in place to prevent the possibility of damage of equipment, mild or severe personal injury, or even death. General safety practices as outlined in this text should be performed at all times.

2.3 Personal, Operating, and Installation Safety

Do not walk, stand on, or use the docks under any of the following conditions:

- The dock shows signs of damage.
- The dock is not in its fully assembled state.
- Leg holder set bolts are not fully tightened.
- All bolts and nuts are not fastened securely per Bestmade Docks' specifications.
- The dock has been modified or repaired by an individual unauthorized by Bestmade Docks.
- The weather is severe including, but not limited to, excessive rain, wind, or waves.
- The dock has ice, snow, or other potentially hazardous conditions on its walking surface.

Additional Safety Recommendations:

- Never use the docks beyond the rated maximum weight capacity, as specified in this document.
- Do not allow anyone to swim under or near the dock at any time.
- Before allowing anyone to use the docks, be certain they fully understand the proper procedure for safe use.
- Keep people and pets clear during removal and installation of docks.

- Check the dock periodically as specified in the general maintenance section of this document for excessively corroded or rotted members, or any other condition in which safe use of the dock has been compromised.
- Wear heavy leather gloves when handling the docks during removal and installation, or during any adjusting. Insufficient hand protection when handling the docks can cause serious personal injury.
- Do not attempt to make any adjustments to the docks while they are in use.
- Never use the docks under the influence of drugs, alcohol, or medication.
- Dock maintenance schedule must be followed to avoid possible equipment failure or personal injury. See the maintenance section of this text for more information. Failure to perform proper maintenance can result in equipment damage or failure.
- Do not exceed the maximum torque rating on all bolts as specified in this document.
- Do not exceed the maximum weight rating on the docks.
- Never allow children to be on, near, or in the vicinity of the docks unsupervised. Failure to do so could result in serious personal injury or death.
- Never add additional equipment or products to the docks without prior authorization by the Bestmade Docks.

2.4 Mooring and Docking Watercraft

Often times one of the primary functions of a lake front dock is to tie or secure a watercraft to the dock for mooring purposes. If done correctly, your Bestmade Docks can certainly handle the pressures exerted on the docks by a light watercraft being tied on directly. Since the docks are installed in a variety of locations, with varying water levels, wave heights, and wind directions, Bestmade Docks can neither specify safety limitations, nor take responsibility for damages or personal injury associated with any improperly moored watercraft. The best choice is to avoid securing a watercraft to the dock directly, and instead place the watercraft on a properly sized hoist.

2.5 Rated Load Capacity

The maximum rated capacity for any one section of dock in its installed position, whether connected to other docks or not, is 750 lbs. Exceeding this maximum rated weight limit could result in equipment failure which could lead to personal injury or death.

3. Inspection and Maintenance

3.1 Inspection and Maintenance Introduction

To ensure your Bestmade Dock performs at an exceptional level for the lifetime of the product, and to prevent compromising the safety of the dock, the following preventative maintenance should be performed.

3.2 Annual Inspection

At least once a year, the docks must be thoroughly inspected using the following procedure:

1. Check all bolts and fasteners are tightened properly and in good working order.
2. Check the docks for rotted, cracked, split, or broken members.
3. Check all parts of the frame and deck thoroughly for defects of any kind.
4. Lube all leg set bolts as needed with a good quality marine grade anti-seize.

3.3 Storage Procedure

When storing your docks, use the following procedure:

1. Protect your docks as best as possible from airborne fallout, chemicals, tree sap, ice, or other weather hazards.
2. Never use the docks to lift or hang any auxiliary equipment such as boating hardware.
3. Do not allow anyone to swim, wade, or play near the stored docks at any time.